HPW HIGH PRESSURE PUMPS

DIS- & RE-ASSEMBLY INSTRUCTIONS

CHANGING THE SEALS

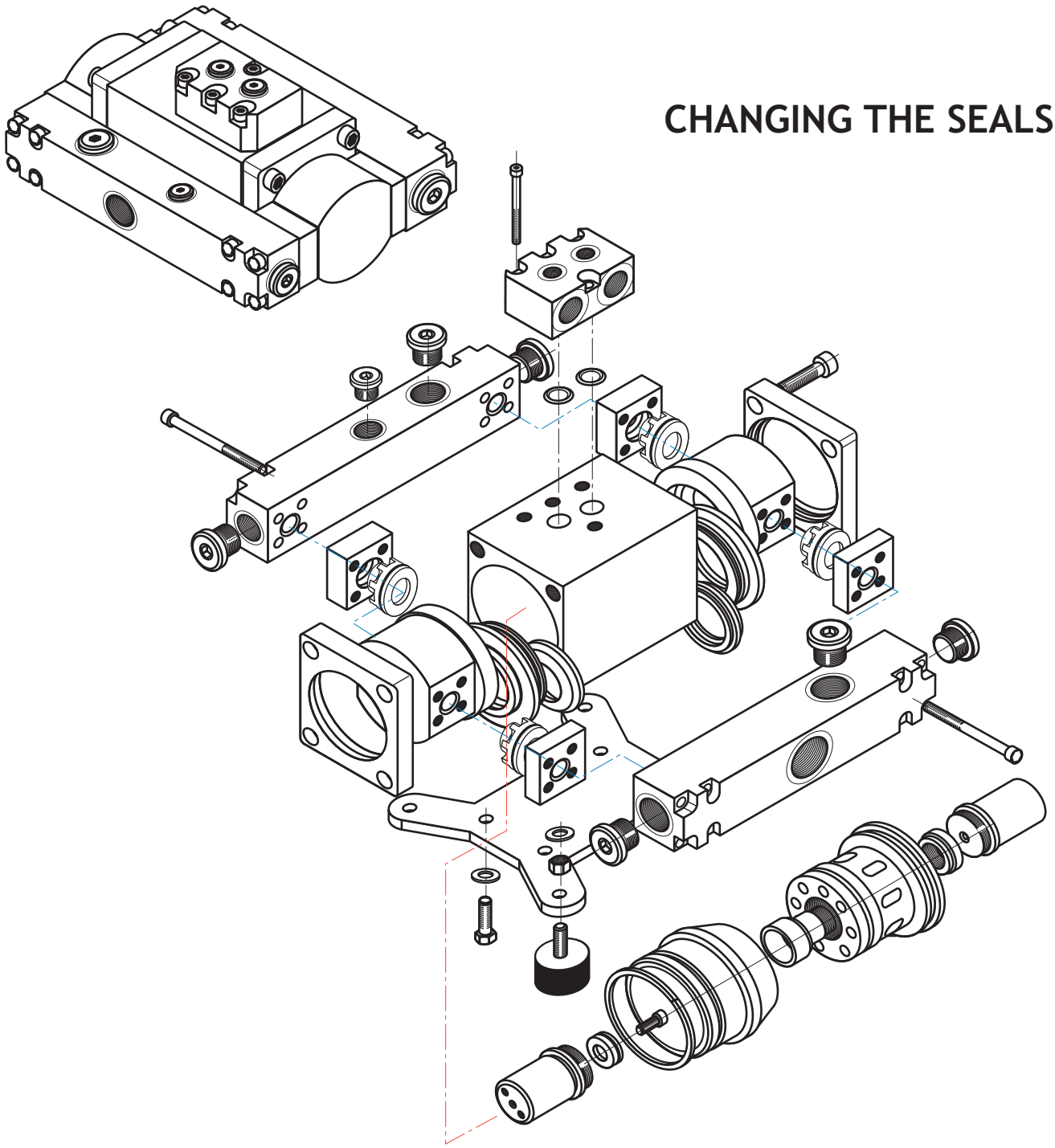

DYNASET OY, Menotie 3,
FI-33470 Ylöjärvi, Finland

Tel.: +358 3 3488200

Fax: +358 3 3488222

E-mail: info @dynaset.com

ATTENTION !
PRIOR TO DISASSEMBLING THE PUMP, MAKE SURE THAT THE CORRESPONDING SPARE PART PAGES ARE AT HAND FOR INSTANT REFERENCE AND AUTHENTICATION !

HPW-pumps may roughly divided into three groups with the reference to their construction:

1. Units with separate water suction and discharge manifolds but without separate sealing (water) flanges - TYPE I.
2. Units with separate water suction and discharge manifolds as well as with separate sealing (water) flanges - TYPE II.
3. Pumps with water suction and discharge channels integrated in pump body and water heads. Separate sealing flanges are used in this construction - TYPE III.

If you are going to clamp the pump in vice, slip jaws of aluminium or plactic should be used in order to exlude damaging of pump casing.

Ensure that both water and hydraulic circuit of the HPW-pump are depressurized.
Disconnect hydraulic and water lines and detach the HPW-pump from a carrier machine.

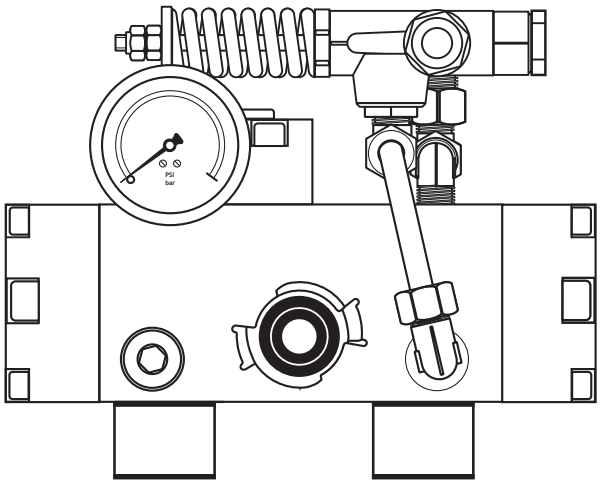

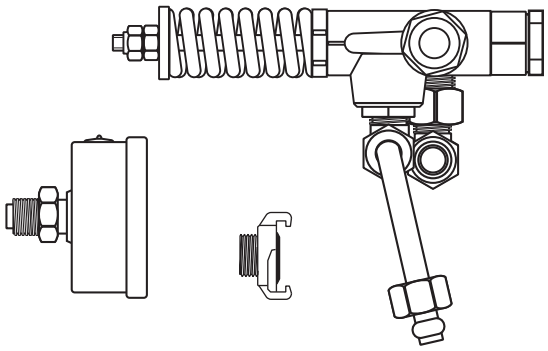

Prior to dissassembling the pump UNLOADER VALVE, PRESSURE GAUGE and hose coupling should be detached from the unit.

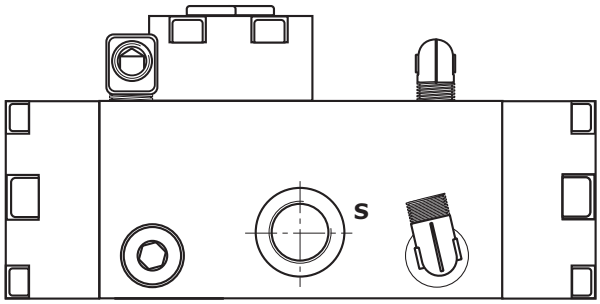

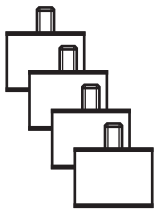

Detach the rubber cushions if you consider it necessary.

Open allen screws and detach P/T block:

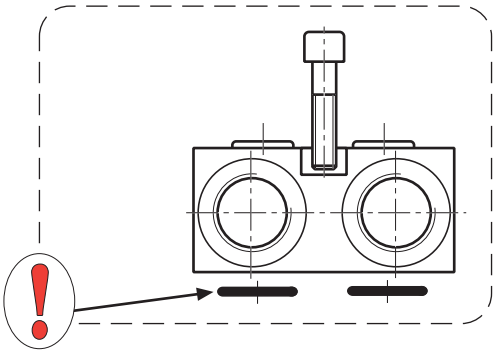

ATTENTION !

Further on pump seals are marked with exclamation mark.

For proper seal identication refer to the spare part pages for Your HPW-unit.

1. DETACHING WATER MANIFOLDS

TYPE I, II

1.1
It is recommended to mark the water heads and corresponding ends of pump body to ensure that the unit will be re-assembled properly.

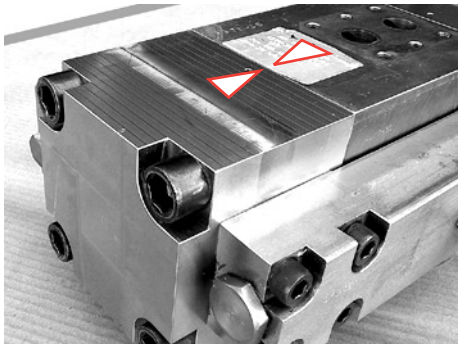

1.2
Detach both suction and discharge water manifolds:

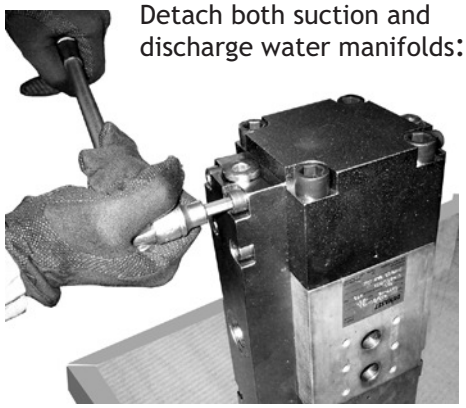

1.3
Remove suction water valves from suction manifold as well asdischarge water valves from pump's water heads.

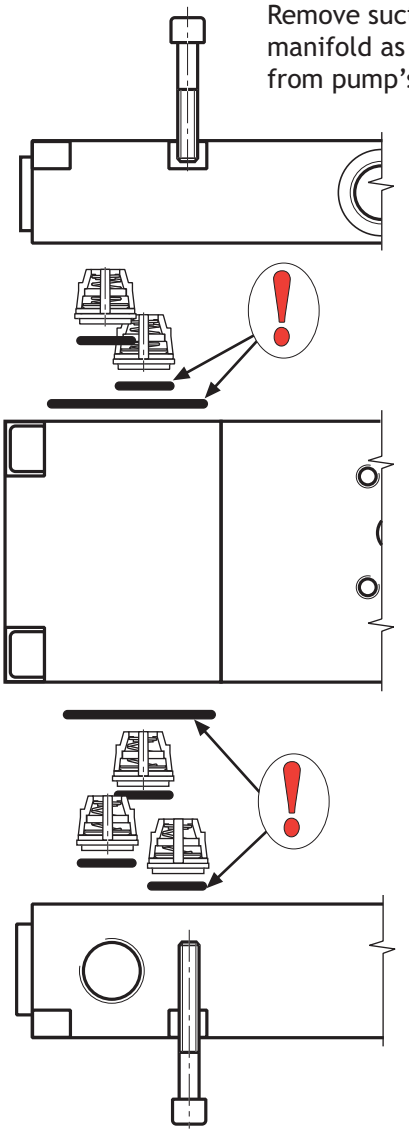

A pump with water valves of type A.

NOTE !
Water valves, used in HPW-pumps have the same construction, but differ by their appearance. On that ground we can divide them into two types: **type A** with plastic valve cap and **type B** with steel valve cap.

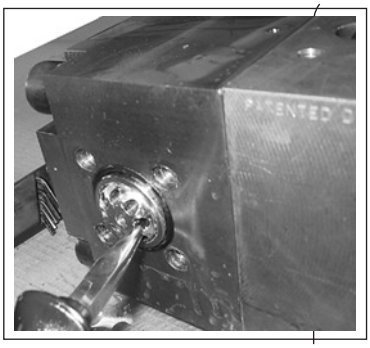

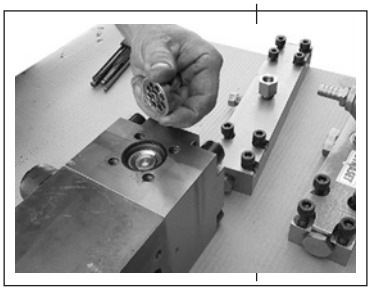

Water valves of type B.

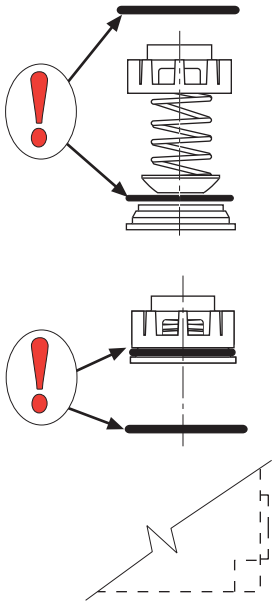

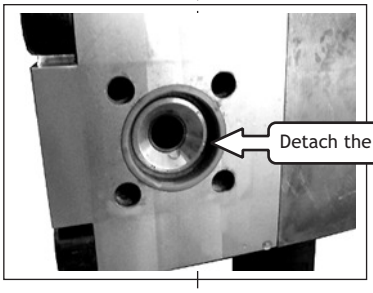

2. DETACHING WATER HEADS

PUMPS OF ALL TYPES

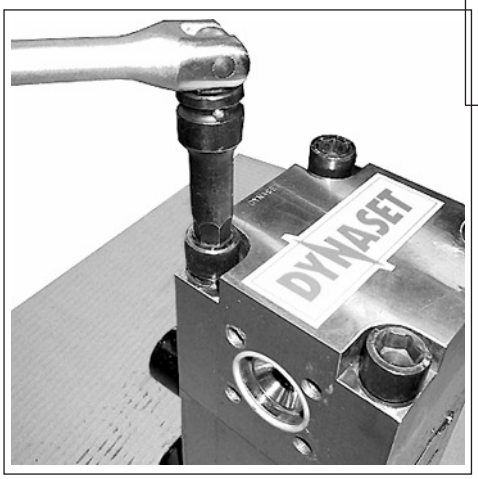

2.1.
Open allen screws and detach both water heads:

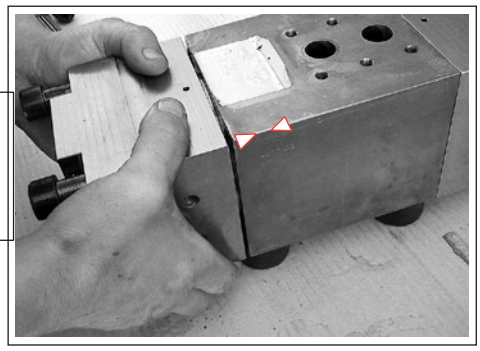

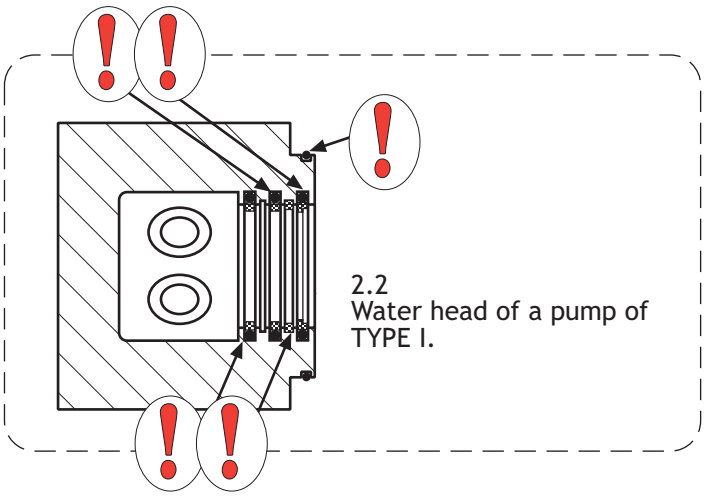

2.2
Water head of a pump of TYPE I.

2.3
Detaching water heads and water valves from a pump of TYPE III.

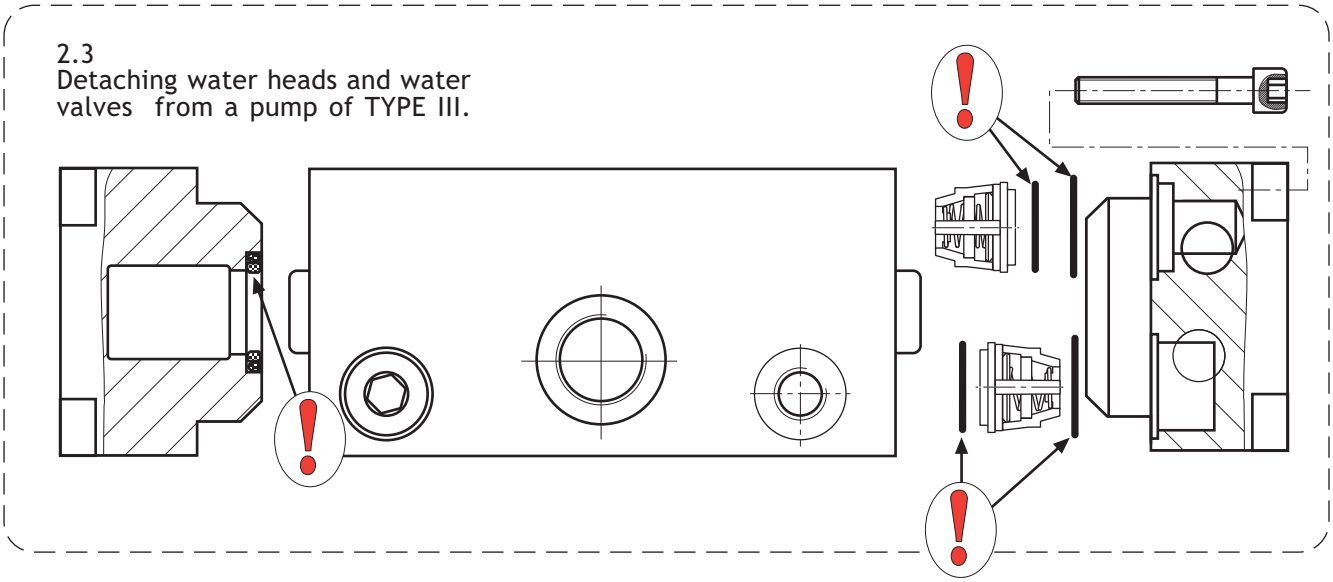

NOTE FOR ITEMS 1.3 AND 2.3 !

THE PRESSURE VALVE'S SPRING IS SHORTER AND OF CONSIDERABLY BIGGER DEFECTION RATE THAN THE SUCTION VALVE'S ONE.
DO NOT MIX UP THE VALVES WHEN RE-ASSEMBLING THE PUMP !

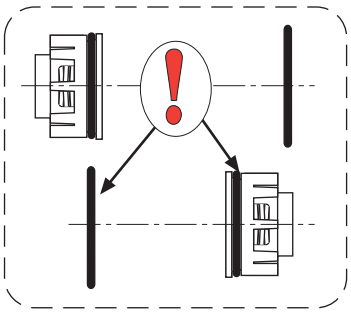

3. DETACHING THE PISTON ASSEMBLY

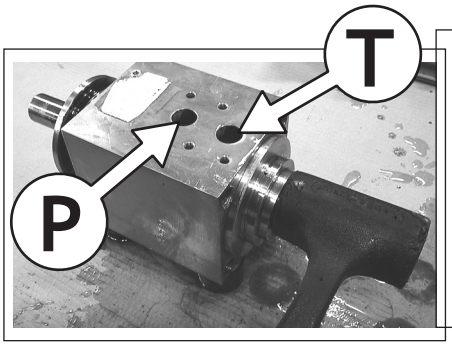

3.1
Drive out the piston assembly with PLASTIC OR WOODEN HAMMER:

NOTE THE DIRECTION WHEN MAKING THIS PROCEDURE !
P - hydraulic pressure port
T - hydraulic return (tank) port.

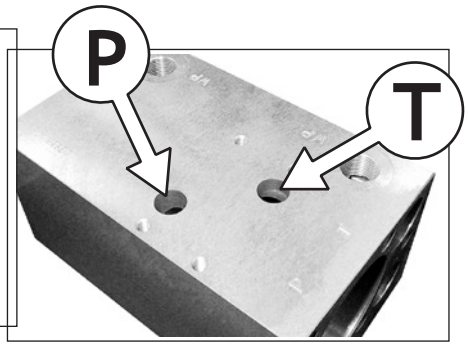

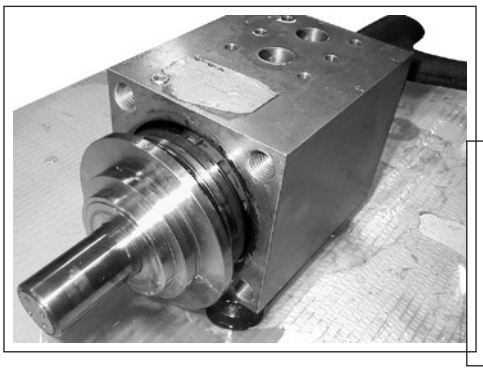

3.2.
Pull out the seal flange if your pump is provided with them:

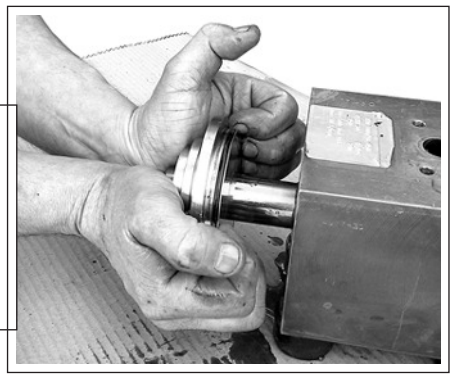

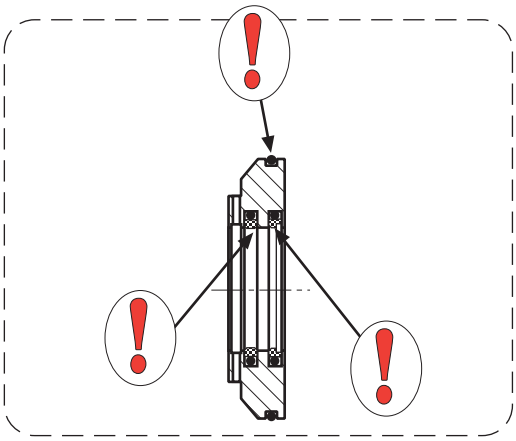

3.3
Pull the piston assembly out by hand:

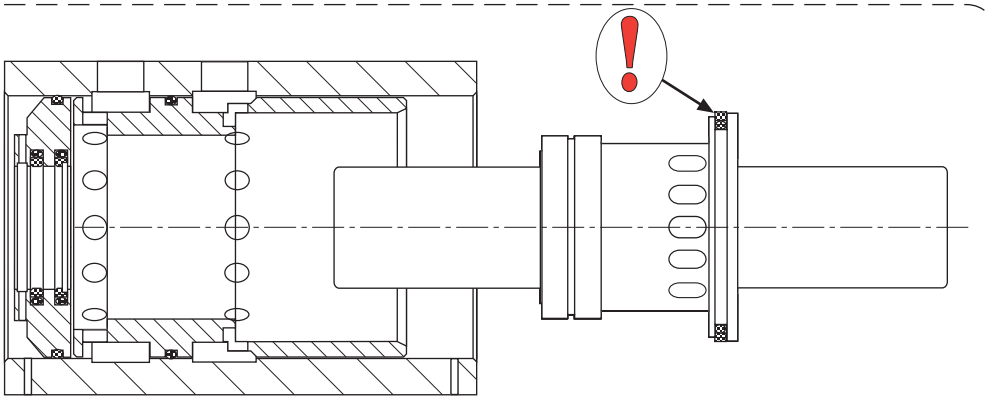

4. DETACHING THE CYLINDER LINER

4.1
Tip out the cylinder liner together with other seal flange. Use plastic pipe or wooden block of suitable diameter.

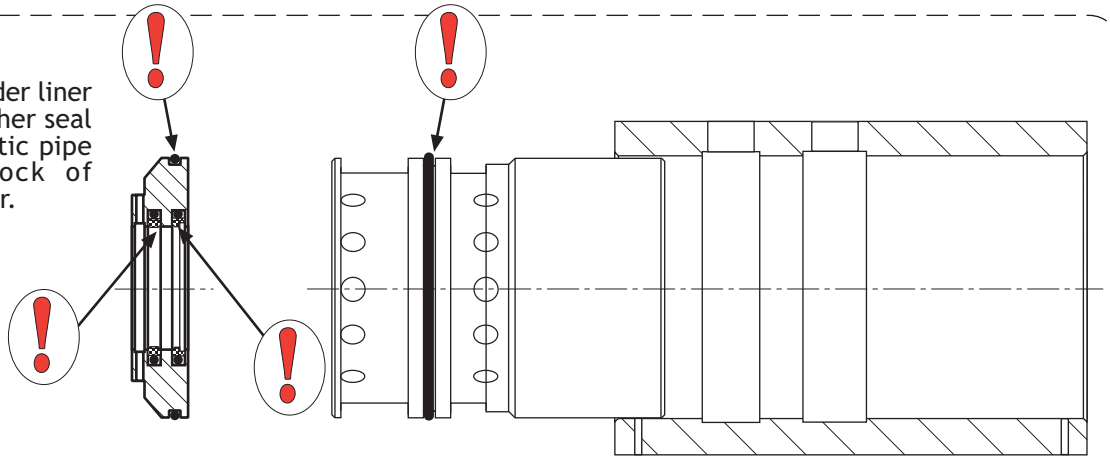

4.2
HPW-pumps equipped with steel body are usually provided with a cylinder liner of different appearance.

4.2.2
Prior to detaching the cylinder liner from pump body, remove the locking ring from it's annular groove using two screwdrivers.

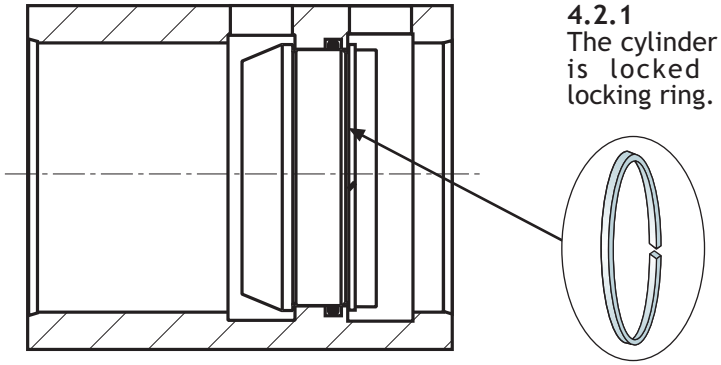

4.2.1
The cylinder liner is locked with locking ring.

4.2.3
Tip out the cylinder liner. Use plastic pipe or wooden block of suitable diameter.

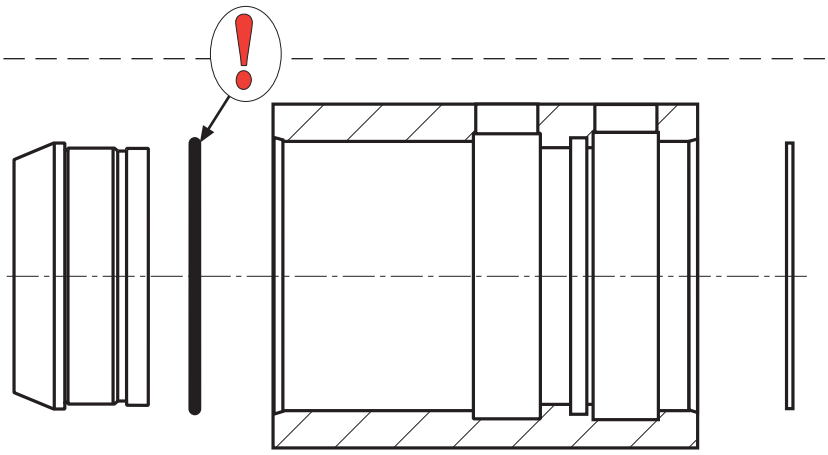

5. DISMANTLING THE PISTON ASSEMBLY

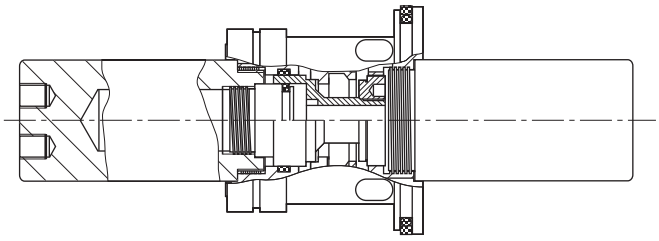

Sealings for reversal valve of hydraulic piston **are not included** into a SEAL KIT. Thereto, dismantling of the piston assembly requires special hand tools. If You either consider the necessity of seal change in piston assembly, or, for instance, the other water piston should be replaced, above seals and tools are to be ordered from DYNASET OY or their local representative.

Special piston key for dismantling and re-assembling a piston unit.

NOTE !
2 pcs required !

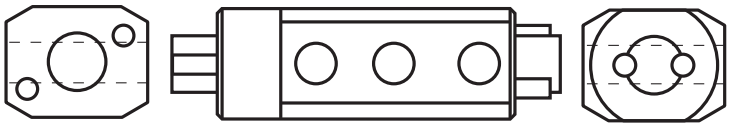

5.1
Remove the hydraulic piston's seal.

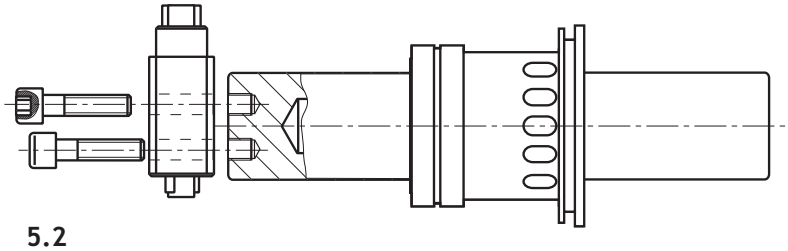

5.2
Attach the piston key to the water piston end as shown on the sketch and vice the assembly firmly.

NOTE !
If You are not going to change water pistons, it is recommended to mark them prior to detaching in order to restore an original installation.

5.3
Warm the hydraulic piston max. upto 150 °C with HOT AIR BLOWER to plastificate the tightening glue used in threated joints.

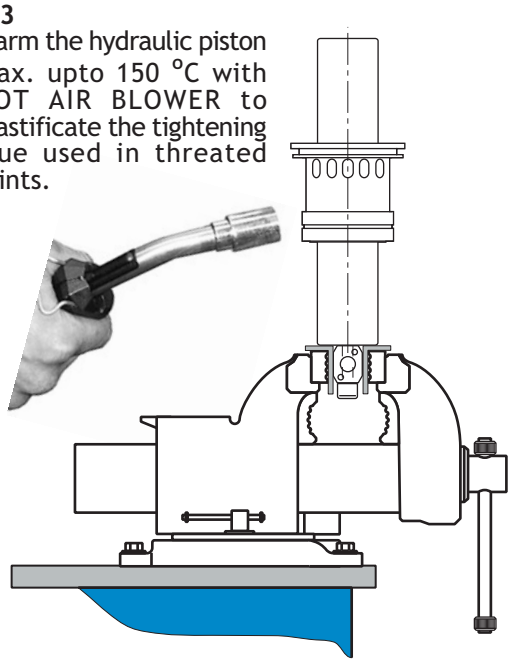

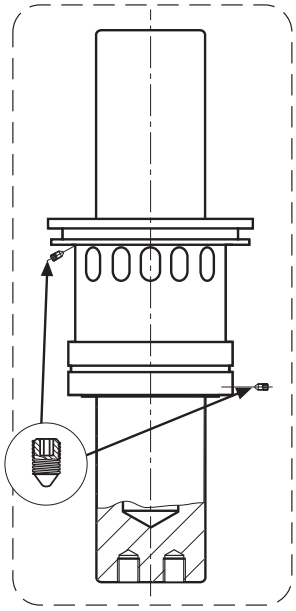

5.4
Use allen key of proper size to open set screws (2 pcs.) of water pistons *):

*) Check whether in your pump is used suchlike locking.

5. DISMANTLING THE PISTON ASSEMBLY

5.5
Using a hook wrench detach the hydraulic piston from the other water piston.

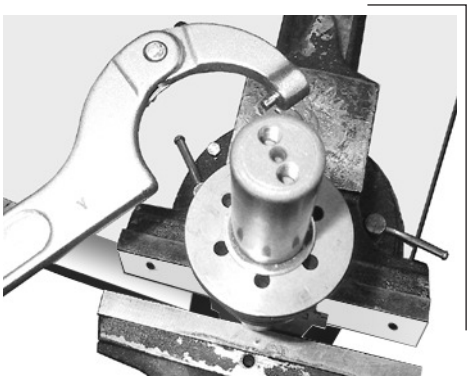

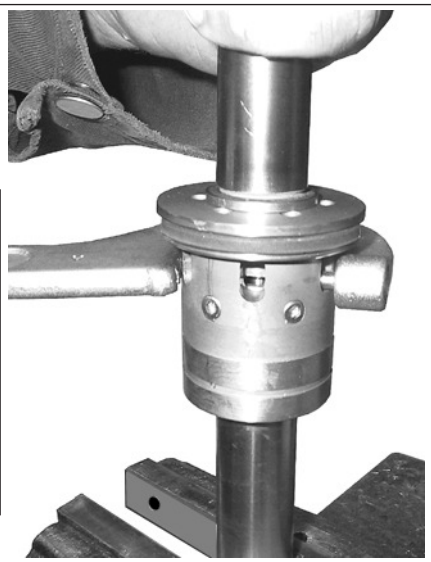

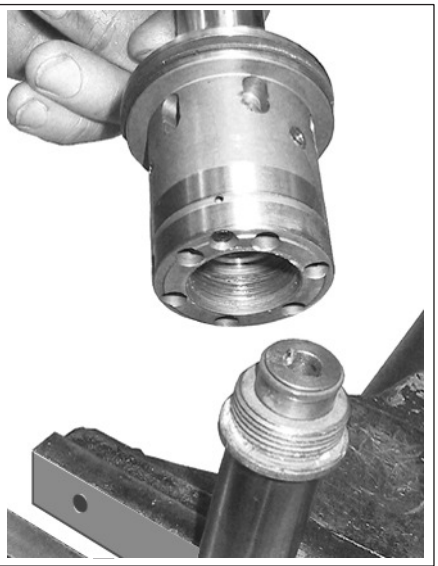

5.6
Detach the seal from the guide piece of reversal valve:

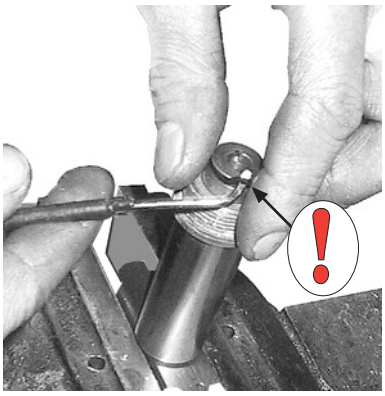

5.7.
Warm up the threaded joint if necessary:

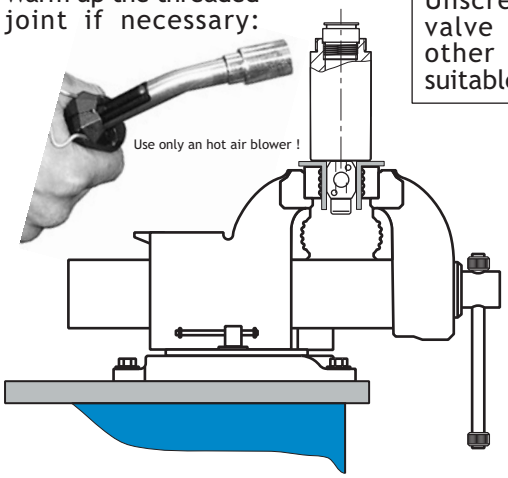

5.8
Unscrew the reversal valve guide. Use the other piston key and suitable wrench:

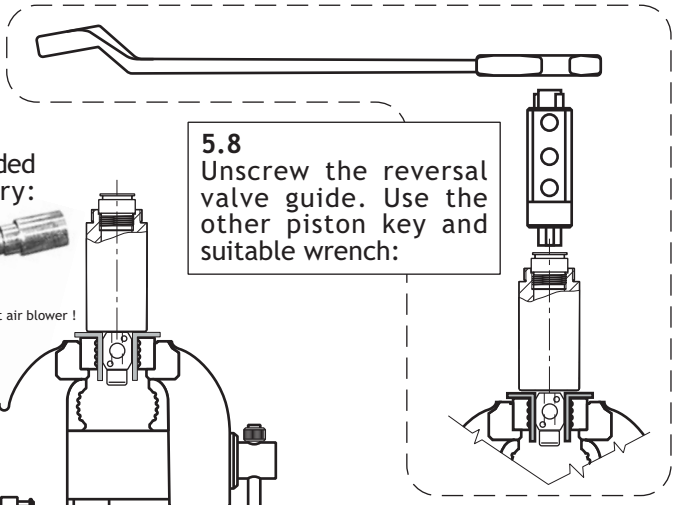

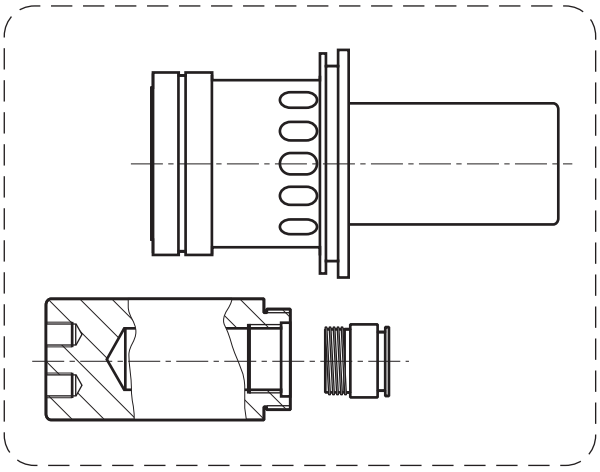

5.8.1
If valve guide is fastened with allen screw, use allen key to open the joint.

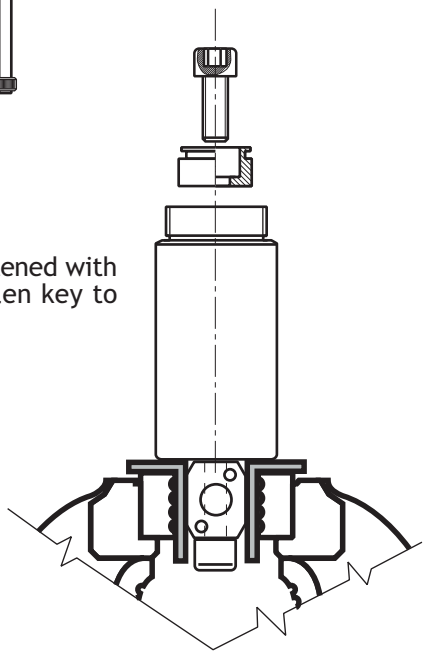

5. DISMANTLING THE PISTON ASSEMBLY

5.9
Attach the piston key to the other water piston and vice the assembly firmly.

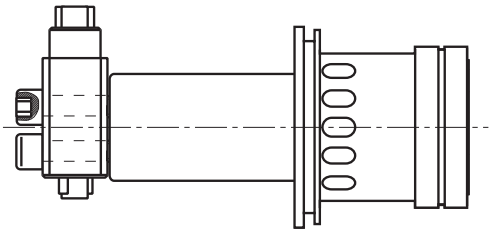

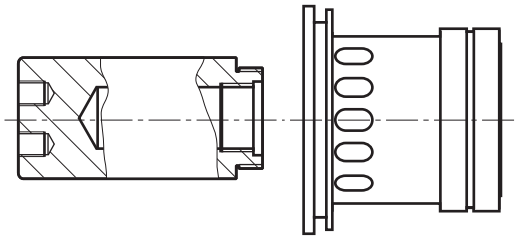

5.10
Using a hook wrench detach the hydraulic piston from the water piston.

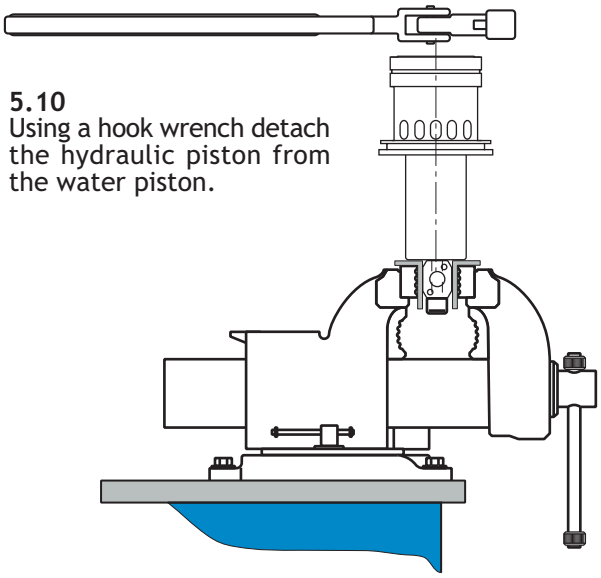

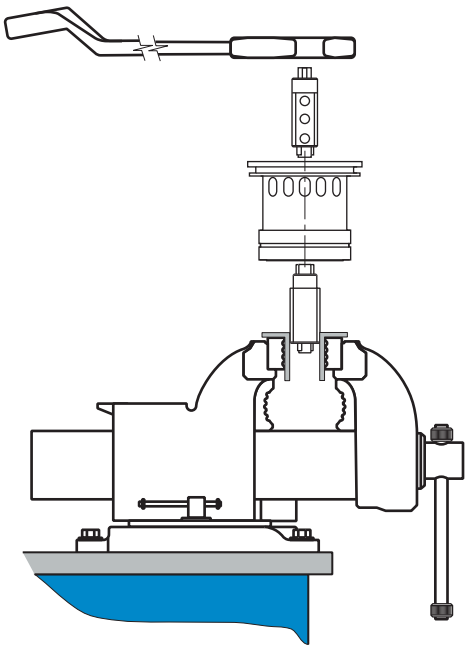

5.11
Vice the other piston key firmly.

5.12
Put the hydraulic cylinder onto viced key, fitting the key's pins into holes in valve's spool.

Fit the other key into holes in valve's seat and open the valve. Use suitable wrench.

You may have to warm up the unit if the joint is too tight. Use hot air blower only !

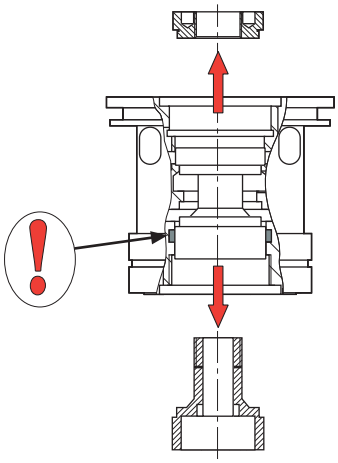

CLEAN ALL PARTS, CHANGE SEALS AND WORN COMPONENTS.

RE-ASSEMBLE THE PUMP IN OPPOSITE ORDER.

6. RE-ASSEMBLING THE PISTON UNIT

Assemble the hydraulic piston.
Refer to the previous page as well as to SPARE PART PAGES for your HPW-unit.

Thread joints in piston assembly should be locked with tightening glue approved to use in contact with hydraulic oil.

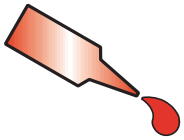

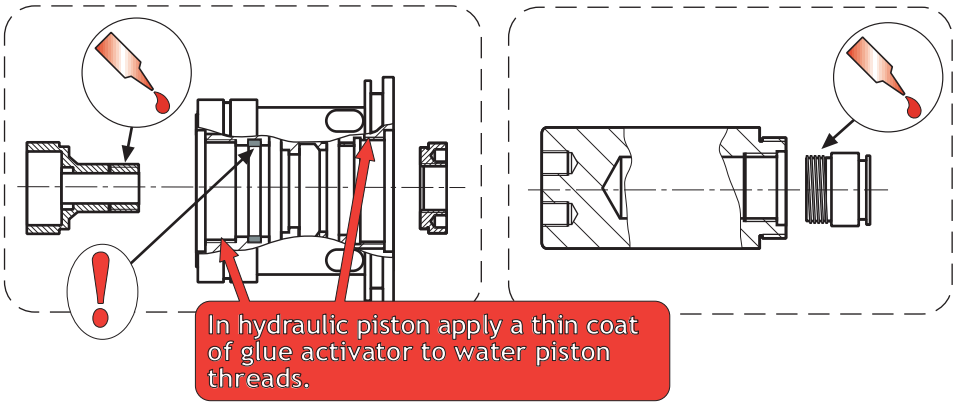

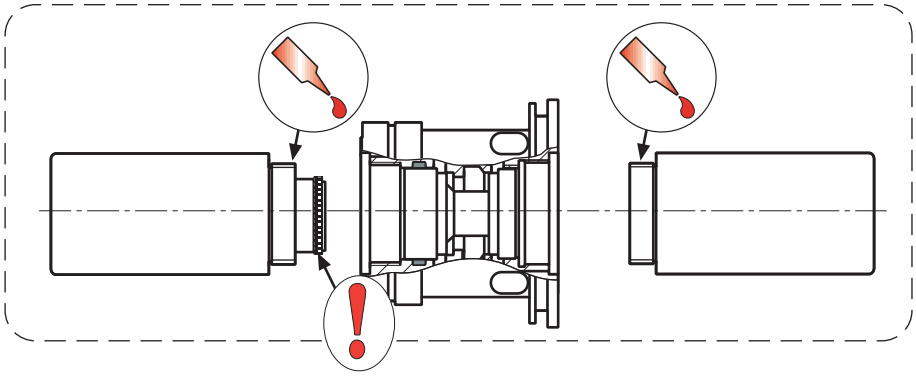

Apply a thin coat of glue to a thread. Ensure that the glue is spread uniformly.
Tighten joints with the appropiriate tools by hand as tight as possible.

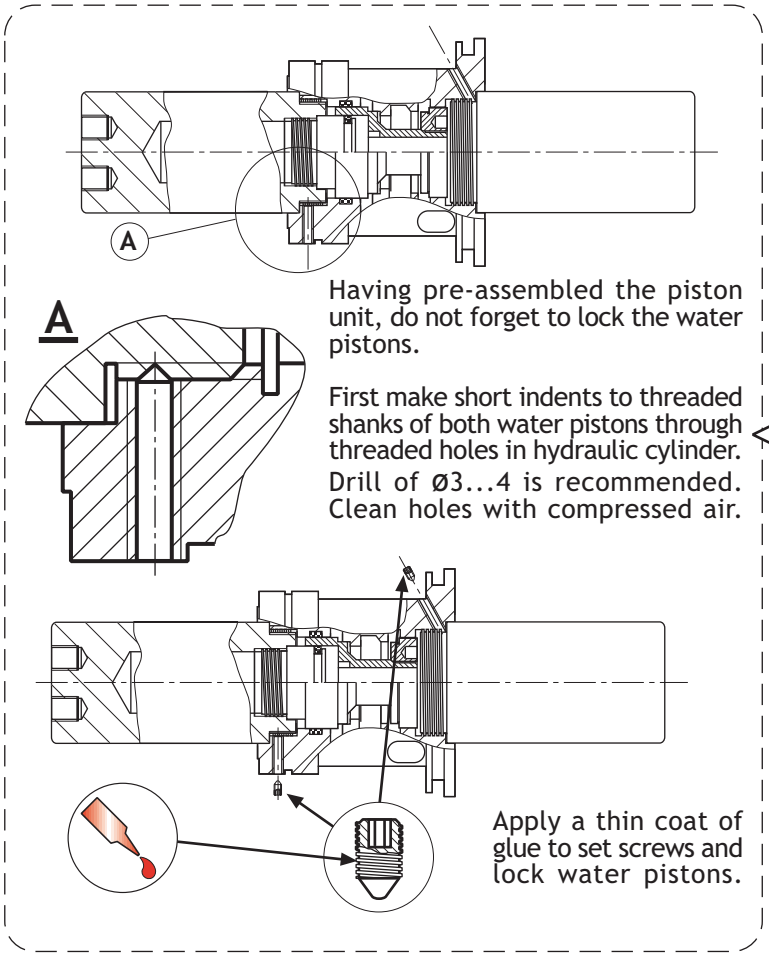

Having pre-assembled the piston unit, do not forget to lock the water pistons.

First make short indents to threaded shanks of both water pistons through threaded holes in hydraulic cylinder.
Drill of Ø3...4 is recommended.
Clean holes with compressed air.

Apply a thin coat of glue to set screws and lock water pistons.

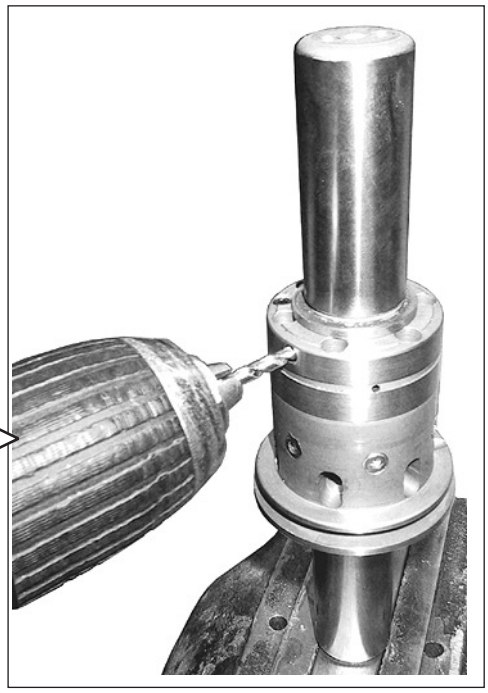

Allow the glue a sufficient time to cure, for example overnight.

6. RE-ASSEMBLING THE PISTON UNIT

IF THE REVERSAL VALVE GUIDE SHOULD BE FASTENED WITH ALLEN SCREW :

Assemble the hydraulic piston.
Refer to the previous page as well as to SPARE PART PAGES for your HPW-unit.

In hydraulic piston, apply a thin coat of glue activator to water piston threads.

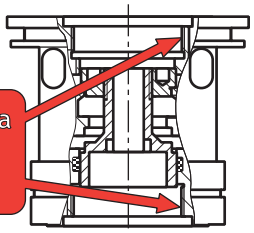

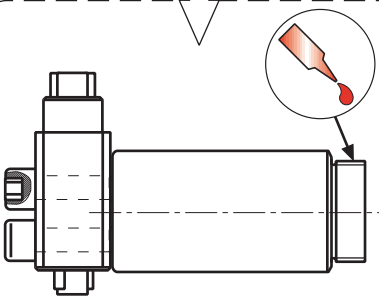

Attach the piston key to the water piston's end and apply a thin coat of glue to a thread. Ensure that the glue is spread uniformly.

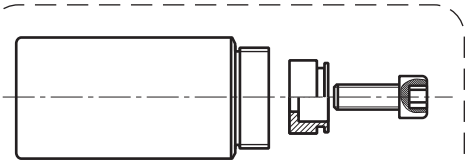

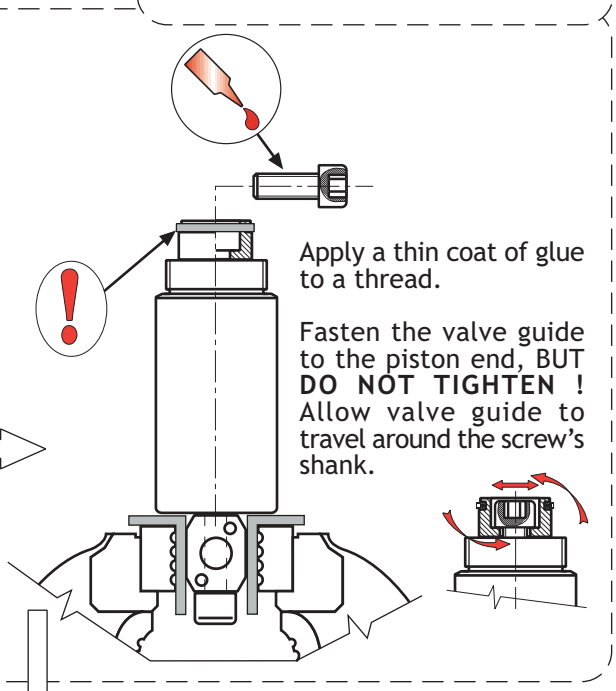

Apply a thin coat of glue to a thread.

Fasten the valve guide to the piston end, BUT **DO NOT TIGHTEN !** Allow valve guide to travel around the screw's shank.

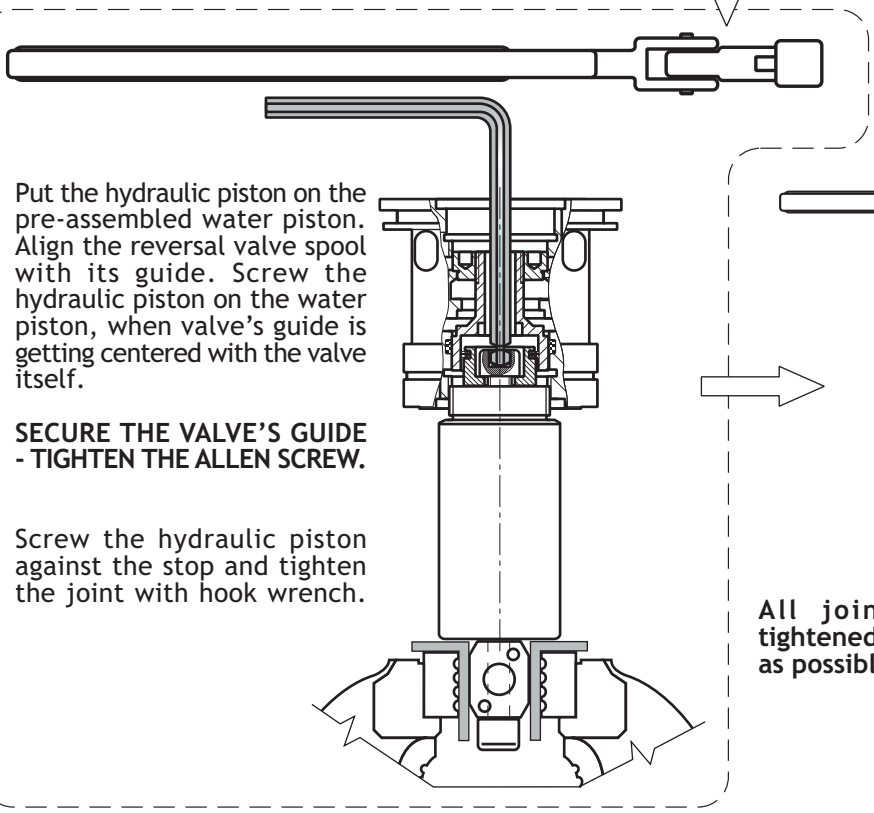

Put the hydraulic piston on the pre-assembled water piston. Align the reversal valve spool with its guide. Screw the hydraulic piston on the water piston, when valve's guide is getting centered with the valve itself.

SECURE THE VALVE'S GUIDE - TIGHTEN THE ALLEN SCREW.

Screw the hydraulic piston against the stop and tighten the joint with hook wrench.

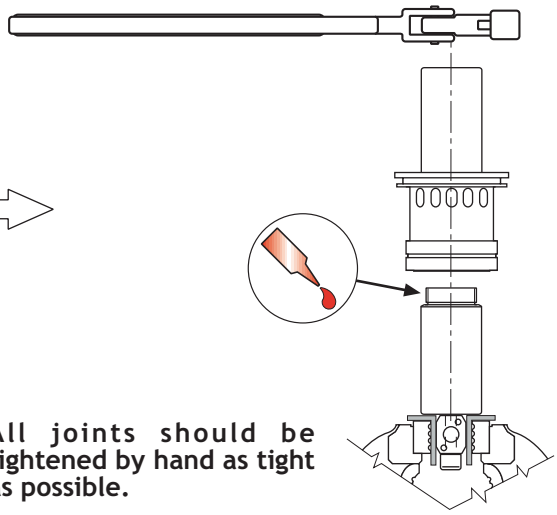

All joints should be tightened by hand as tight as possible.

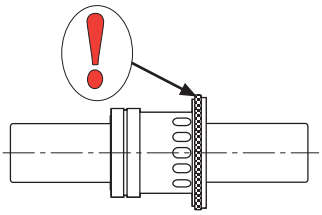

7. RE-ASSEMBLING THE PUMP

TYPE I

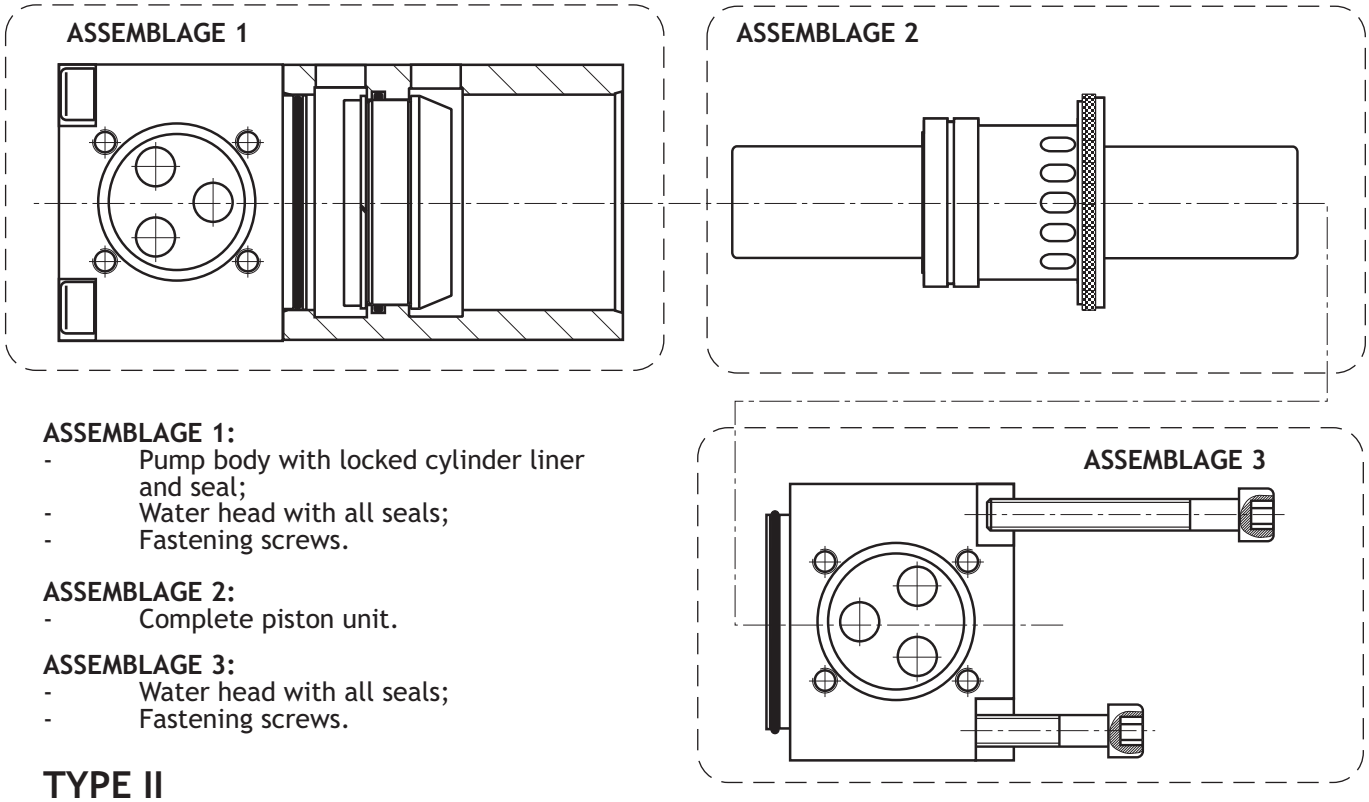

ASSEMBLAGE 1:
- Pump body with locked cylinder liner and seal;
- Water head with all seals;
- Fastening screws.

ASSEMBLAGE 2:
- Complete piston unit.

ASSEMBLAGE 3:
- Water head with all seals;
- Fastening screws.

TYPE II

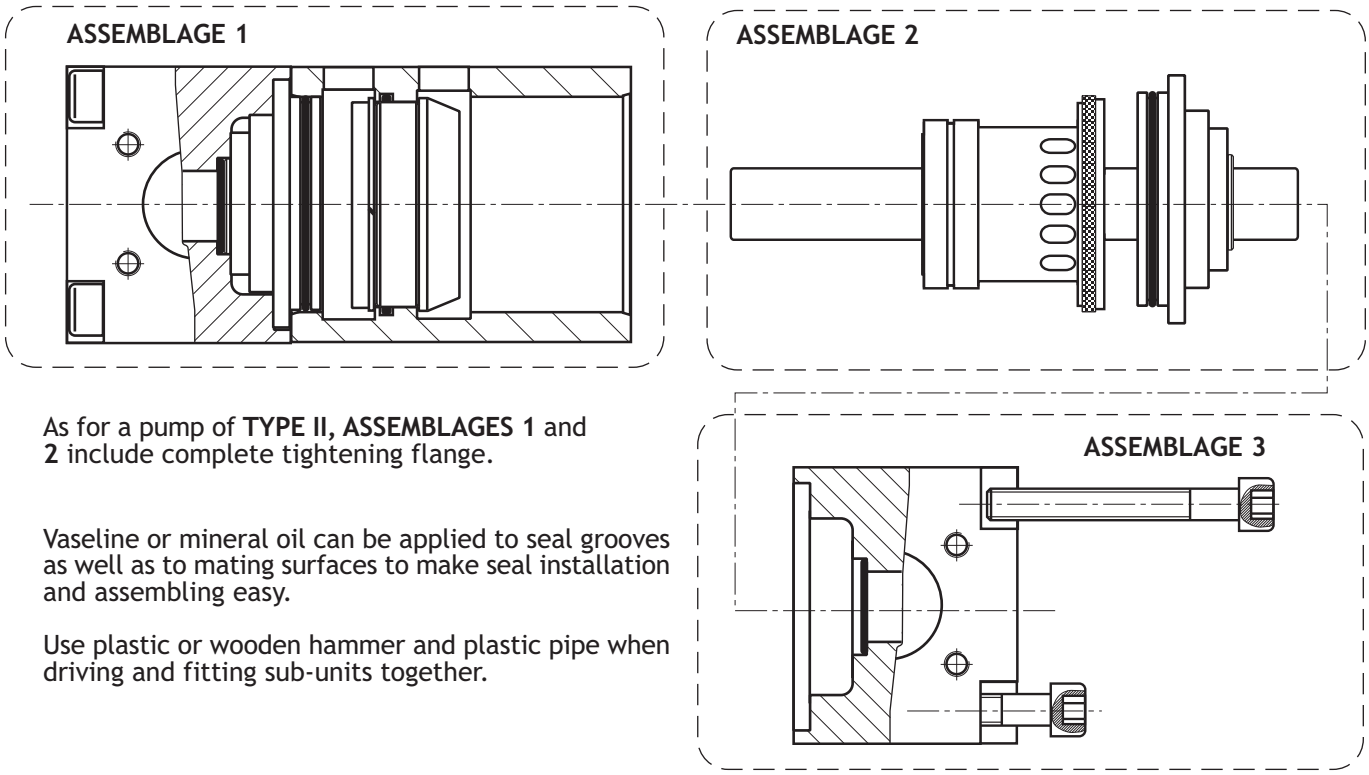

As for a pump of **TYPE II, ASSEMBLAGES 1** and **2** include complete tightening flange.

Vaseline or mineral oil can be applied to seal grooves as well as to mating surfaces to make seal installation and assembling easy.

Use plastic or wooden hammer and plastic pipe when driving and fitting sub-units together.

Assemble the water valves and insert them into annular groves in suction manifold and water heads in proper way (Ref. to pages 3 - 4). Attach water manifolds to the pump.
Finalise the pump assembly attaching P/T-block and other detached units and parts.

Test the pump prior to use.

7. RE-ASSEMBLING THE PUMP

TYPE III

ASSEMBLAGE 1

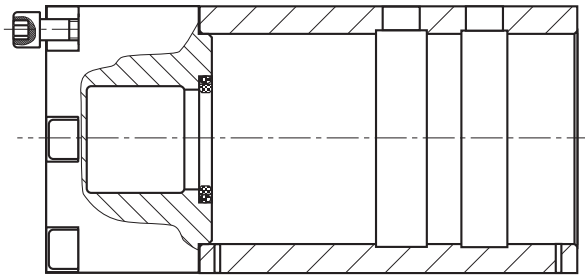

ASSEMBLAGE 2

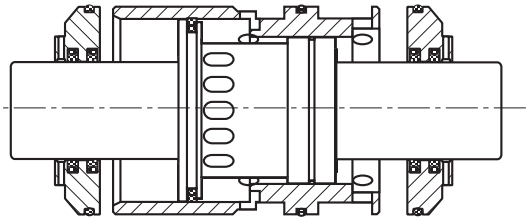

DO NOT FORGET TO INSTALL WATER VALVES IN ASSEMBLAGE 1 !

Vaseline or mineral oil can be applied to seal grooves to make seal installation easy.

Apply a thin coat of vaseline to mating surfaces and put the piston assembly with cylinder liner (ASSEMBLAGE 2) into a pump body (ASSEMBLAGE 1).

Drive the ASSEMBLAGE 2 against the stop with plastic or wooden hammer and plastic pipe.

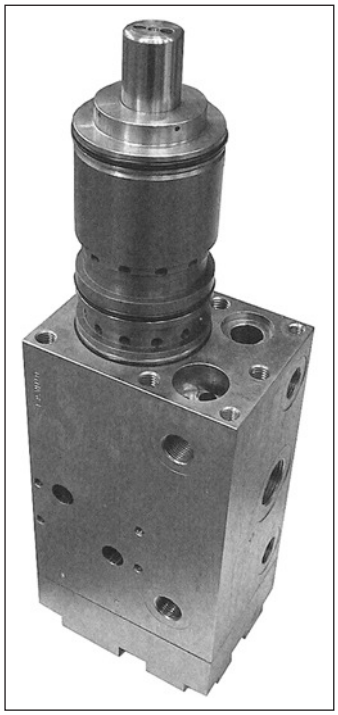

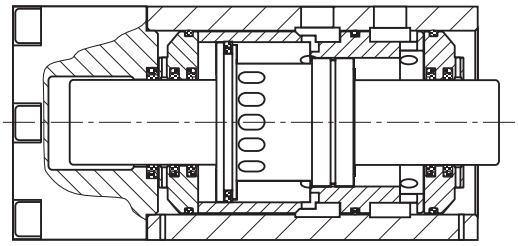

After having installed remaining seals and water valves to the pump body and other water head, assemble the pump.

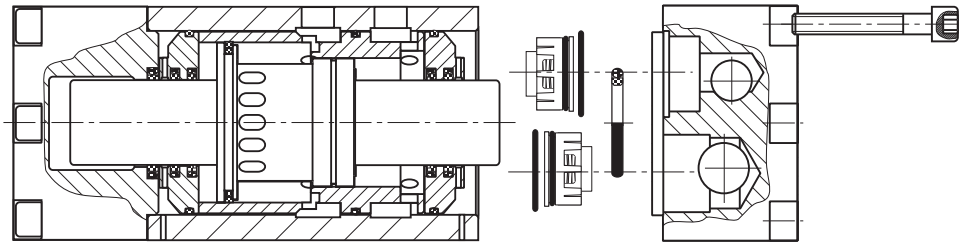

Finalise the pump assembly attaching P/T-block and other detached units and parts.

Test the pump priot to use.

Alternatively, it is possible to assemble a pump of TYPE III broadly in a same way as TYPE II.

RECOMMENDED TIGHTENING GLUES			
MANUFACTURER	PRODUCT	ID	Notes
WÜRTH	saBesto	0893 545 XXX*)	upto 3/4”
LOCTITE	Loctite 542		
WEICONLOCK	AN 305-42		
*) retail package size			
TIGHTENING GLUE ACTIVATOR			
WEICONLOCK	ACTIVATOR F		

TIGHTENING TORQUES FOR BOLTS / SCREWS		
SIZE	STRENGTH CLASS	TIGHTENING TORQUE Nm
M6	8.8 12.9	8 16
M8	8.8 12.9	24 40
M10	8.8 12.9	35 75
M12	8.8 12.9	65 130
M14	8.8 12.9	90 220
M16	8.8 12.9	170 290

SEAL INSTALLATION IN CLOSED GROOVES

* Compress the seal into a kidney shape. Avoid making sharp bends on the seal - fig. A
* Place the seal ring in compressed form into the groove and push it by hand in the direction of the arrow - fig B.

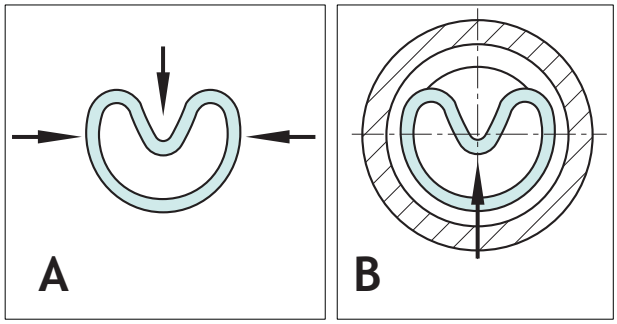

ATTENTION !
WHEN CARRYING OUT ANY DISASSEMBLING, SERVICE OR REPAIR OF DYNASET-UNIT OR HYDRAULIC SYSTEM, ABSOLUTE CLEANLINESS MUST BE MAINTANED TO ENSURE RELIABLE AND TROUBLE-FREE OPERATION OF YOUR EQUIPMENT.